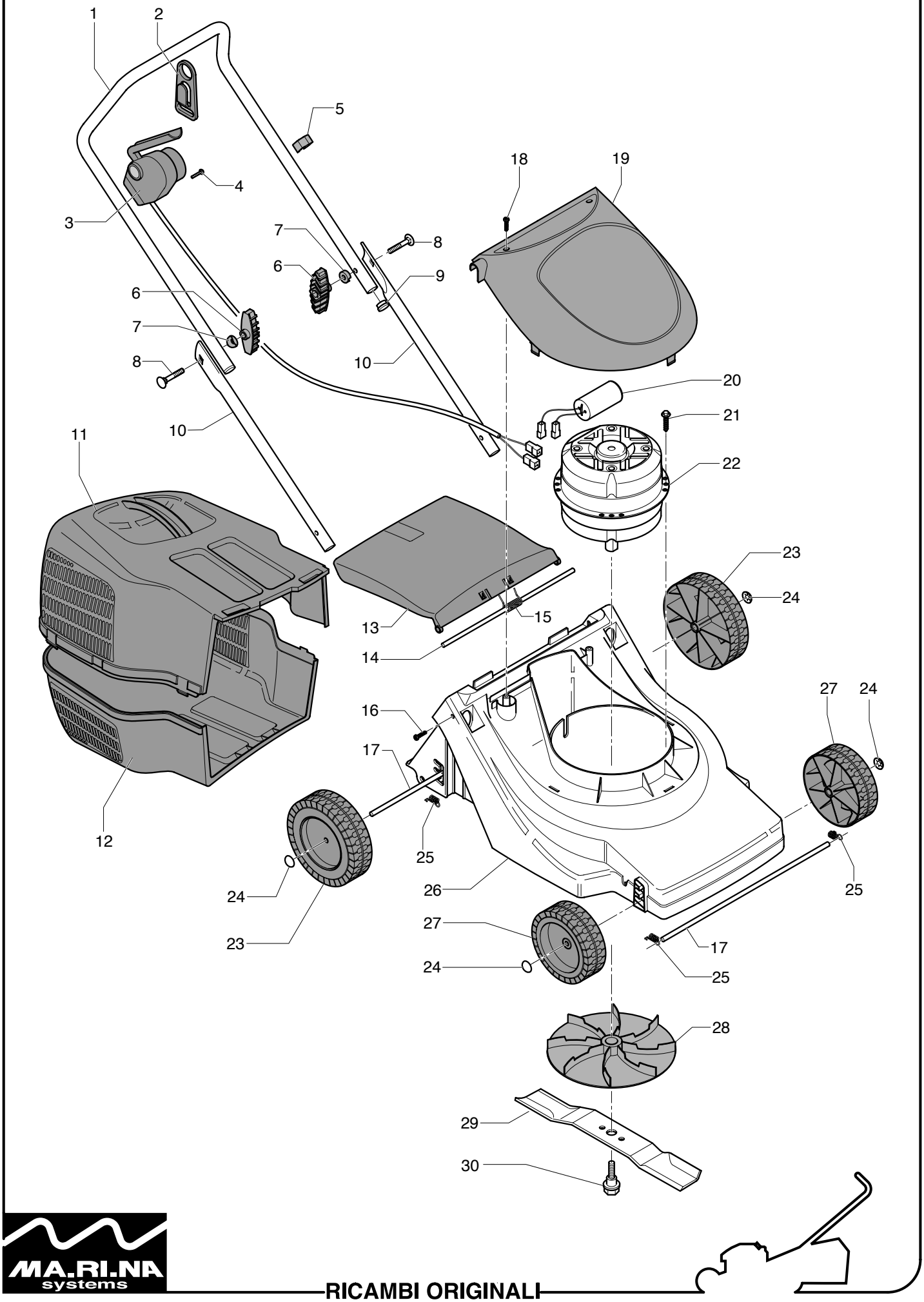
1
2
5
4
3
18
19
7
8
6
9
6
7
8
10
10
20
21
11
22
23
24
13
15
14
27
24
16
17
12
25
24
26
25
23
27
17
24
25
28
29
30

MA.RI.NA.

GX 33 E

POS.	CODICE	I	F	D	GB	E	800 W	1000 W
1	CP032038	MANICO SUP.	GUIDON	STIEL	HANDLE	MANILLAR	1	1
2	CP042218	SUPPORTO CAVO	PORTE CABLE	KABELHALTER	CABLE SUPPORT	FIJADOR CABLE	1	1
3	CP042185	INTERRUTTORE	INTERRUPTEUR	SCHALTER D-I-F-A-B-N	SWITCH	INTERRUPTOR	1	1
4	CP023925	VITE AUTOF.	VIS	SCHRAUBE	SCREW	TORNILLO	2	2
5	CP050222	FERMACAVO	ATTACHE CABLE	KABELBESCHWERER	CLIP	FIJADOR CABLE	1	1
6	CP032228	POMOLO MANICO	ÉCROU	GRIFF	KNOB HANDLE	POMO MANILLAR	2	2
7	CP032230	RONDELLA	RONDELLE	SCHEIBE	WASHER	ARANDELA	2	2
8	CP040640	VITE TTQST	VIS	SCHRAUBE	SCREW	TORNILLO	2	2
9	CP045718	TAPPO	COUVERCLE	KAPPE	CAP	TAPA	2	2
10	CP032033	MANICO INF.	GUIDON	STIEL	HANDLE	MANILLAR	2	2
11	CP032023	CESTO RIGIDO SUP	SAC RAMASSEUR SUP	GRASFANGSACK	GRASS BAG UP	SACO	1	1
12	CP032022	CESTO RIGIDO INF	SAC RAMASSEUR INF	GRASFANGSACK	GRASS BAG DOWN	SACO	1	1
13	CP033018	PARASASSI	DEFLECTEUR	DEFLEKTOR	REAR DOOR	DEFLECTÓR	1	1
14	CP032203	ASTINA	AXE PIVOT	STANGE	HINGE PIN	EJE DEFLECTÓR	1	1
15	CP032193	MOLLA PARASASSI	RESSORT	FEDER	SPRING	MUELLE	1	1
16	CP026338	VITE AUTOF.	VIS	SCHRAUBE	SCREW	TORNILLO	2	2
17	CP033204	ASSE PER RUOTE	AXE ROUE	RADSTIFT	PIN	EJE RUEDA	2	2
18	CP025030	VITE AUTOF.	VIS	SCHRAUBE	SCREW	TORNILLO	2	2
19	CP033103	CUPOLINA SUP. NERA	CALOTTE	VERKLEIDUNG	COVER	CARCASA	1	1
20	CP019810	CONDENSATORE 10 M	CONDENSATEUR	KONDENSATOR	CONDENSER	CONDENSADOR	1	
20	CP019812	CONDENSATORE 12 M	CONDENSATEUR	KONDENSATOR	CONDENSER	CONDENSADOR		1
21	CP026030	VITE AUTOF.	VIS	SCHRAUBE	SCREW	TORNILLO	4	4
22	CP017080F	MOTORE EL. 800 W	MOTEUR	MOTOR	ENGINE	MOTOR	1	
22	CP017098F	MOTORE EL. 1000 W	MOTEUR	MOTOR	ENGINE	MOTOR		1
23	CP033109	RUOTA 150 FORO 7	ROUE	RAD	WHEEL	RUEDA	2	2
24	CP046617	CAPPELLOTTO SFERI	CLIP	RÜCKHALT	RETAINER	ANILLO CLIP	4	4
25	CP033192	MOLLA PER RUOTE 40	RESSORT	FEDER	SPRING	MUELLE	4	4
26	CP033002.02	CHASSIS ROSSO	CARTER	GEHÄUSE	DECK	CHASIS RAL 3000	1	1
27	CP033108	RUOTA 125 FORO 7	ROUE	RAD	WHEEL	RUEDA	2	2
28	CP032158	VENTOLA	VENTILATEUR	LAUFRAD	FAN	VENTILADOR	1	1
29	CP032011	LAMA	LAME	MESSER	BLADE	CUCHILLA	1	1
30	CP032209	VITE LAMA	VIS	SCHRAUBE	SCREW	TORNILLO	1	1